The Translation of Logic Languages

26 The Language Proll

Here, we just consider the core language Proll ("Prolog-light" :-). In particular, we omit:

- arithmetic;
- the cut operator;
- self-modification of programs through assert and retract.

Example:

$$
\begin{array}{lcl}
\mathsf{bigger}(X, Y) & \leftarrow & X = \mathit{elephant}, Y = \mathit{horse} \\
\mathsf{bigger}(X, Y) & \leftarrow & X = \mathit{horse}, Y = \mathit{donkey} \\
\mathsf{bigger}(X, Y) & \leftarrow & X = \mathit{donkey}, Y = \mathit{dog} \\
\mathsf{bigger}(X, Y) & \leftarrow & X = \mathit{donkey}, Y = \mathit{monkey} \\
\mathsf{is_bigger}(X, Y) & \leftarrow & \mathsf{bigger}(X, Y) \\
\mathsf{is_bigger}(X, Y) & \leftarrow & \mathsf{bigger}(X, Z), \mathsf{is_bigger}(Z, Y) \\
? \quad \mathsf{is_bigger}(\mathit{elephant}, \mathit{dog}) & &
\end{array}
$$

A More Realistic Example:

$$\begin{array}{lcl} \mathsf{app}(X, Y, Z) & \leftarrow & X = [\,],\ Y = Z \\ \mathsf{app}(X, Y, Z) & \leftarrow & X = [H|X'],\ Z = [H|Z'],\ \mathsf{app}(X', Y, Z') \\ ? \quad \mathsf{app}(X, [Y, c], [a, b, Z]) & & \end{array}$$

A More Realistic Example:

$$\mathsf{app}(X, Y, Z) \quad \leftarrow \quad X = [\,],\ Y = Z$$

$$\mathsf{app}(X, Y, Z) \quad \leftarrow \quad X = [H|X'],\ Z = [H|Z'],\ \mathsf{app}(X', Y, Z')$$

$$?\quad \mathsf{app}(X, [Y, c], [a, b, Z])$$

Remark:

$[\,]$	$\equiv$	the atom empty list
$[H\|Z]$	$\equiv$	binary constructor application
$[a, b, Z]$	$\equiv$	shortcut for: $[a\|[b\|[Z\|[\,]]]]$

A program p is constructed as follows:

$$
\begin{array}{lcl}
t & ::= & a \mid X \mid _ \mid f(t_1, \ldots, t_n) \\
g & ::= & p(t_1, \ldots, t_k) \mid X = t \\
c & ::= & p(X_1, \ldots, X_k) \leftarrow g_1, \ldots, g_r \\
p & ::= & c_1 \ldots . c_m ? g
\end{array}
$$

- A term t either is an atom, a variable, an anonymous variable or a constructor application.
- A goal g either is a literal, i.e., a predicate call, or a unification.
- A clause c consists of a head $p(X_1, \ldots, X_k)$ with predicate name and list of formal parameters together with a body, i.e., a sequence of goals.
- A program consists of a sequence of clauses together with a single goal as query.

Procedural View of Proll programs:

goal	$=$	procedure call
predicate	$=$	procedure
body	$=$	definition
term	$=$	value
unification	$=$	basic computation step
binding of variables	$=$	side effect

Note: Predicate calls ...

- ... do not have a return value.
- ... affect the caller through side effects only :-)
- ... may fail. Then the next definition is tried :-))

$\Longrightarrow$ backtracking

27 Architecture of the WiM:

The Code Store:

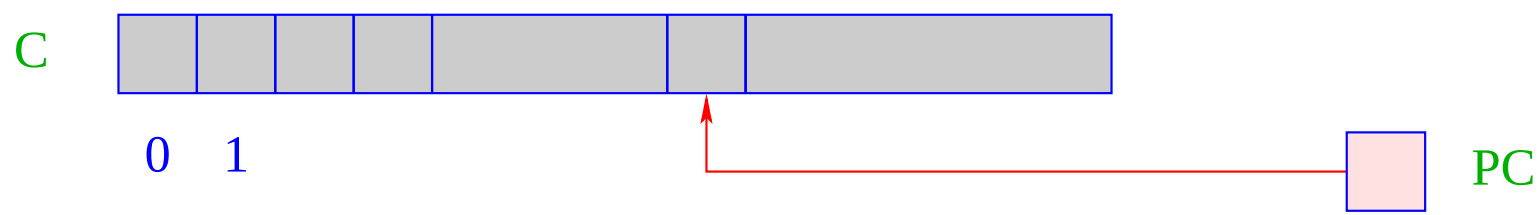

C	=	Code store – contains WiM program;
		every cell contains one instruction;
PC	=	Program Counter – points to the next instruction to executed;

The Runtime Stack:

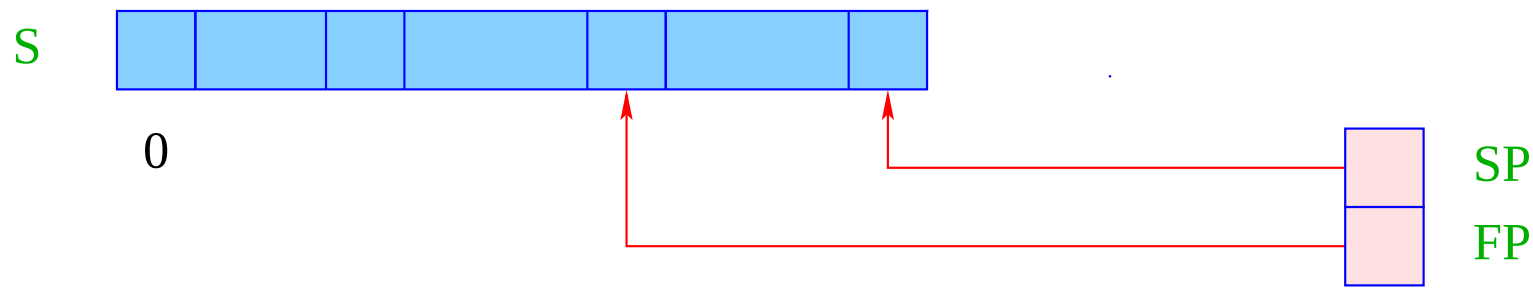

S	=	Runtime Stack – every cell may contain a value or an address;
SP	=	Stack Pointer – points to the topmost occupied cell;
FP	=	Frame Pointer – points to the current stack frame.
		Frames are created for predicate calls,
		contain cells for each variable of the current clause

The Heap:

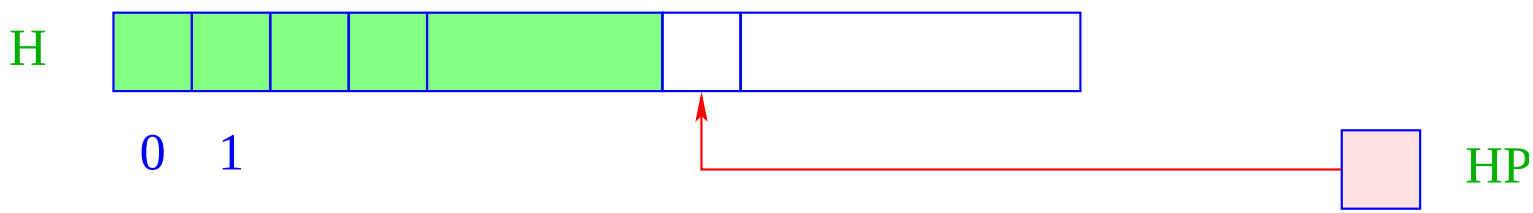

H	=	Heap for dynamicly constructed terms;
HP	=	Heap-Pointer – points to the first free cell;

- The heap in maintained like a stack as well :-)
- A new-instruction allocates a object in H.
- Objects are tagged with their types (as in the MaMa) ...

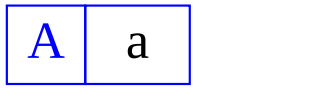

atom 1 cell

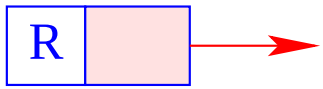

variable 1 cell

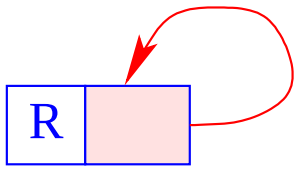

unbound variable 1 cell

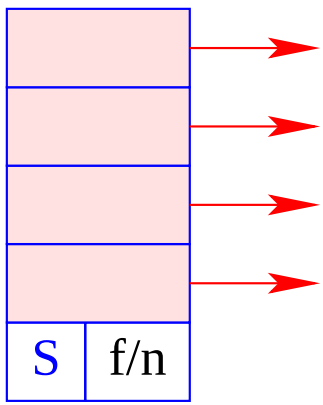

structure (n+1) cells

28 Construction of Terms in the Heap

Parameter terms of goals (calls) are constructed in the heap before passing.

Assume that the address environment ρ returns, for each clause variable X its address (relative to FP) on the stack. Then $\text{code}_A\ t\ \rho$ should ...

- construct (a presentation of) t in the heap; and
- return a reference to it on top of the stack.

Idea:

- Construct the tree during a post-order traversal of t
- with one instruction for each new node!

Example: $t \equiv f(g(X, Y), a, Z).$

Assume that X is initialized, i.e., $S[FP + \rho\, X]$ contains already a reference, Y and Z are not yet initialized.

Representing $t \equiv f(g(X,Y),a,Z)$:

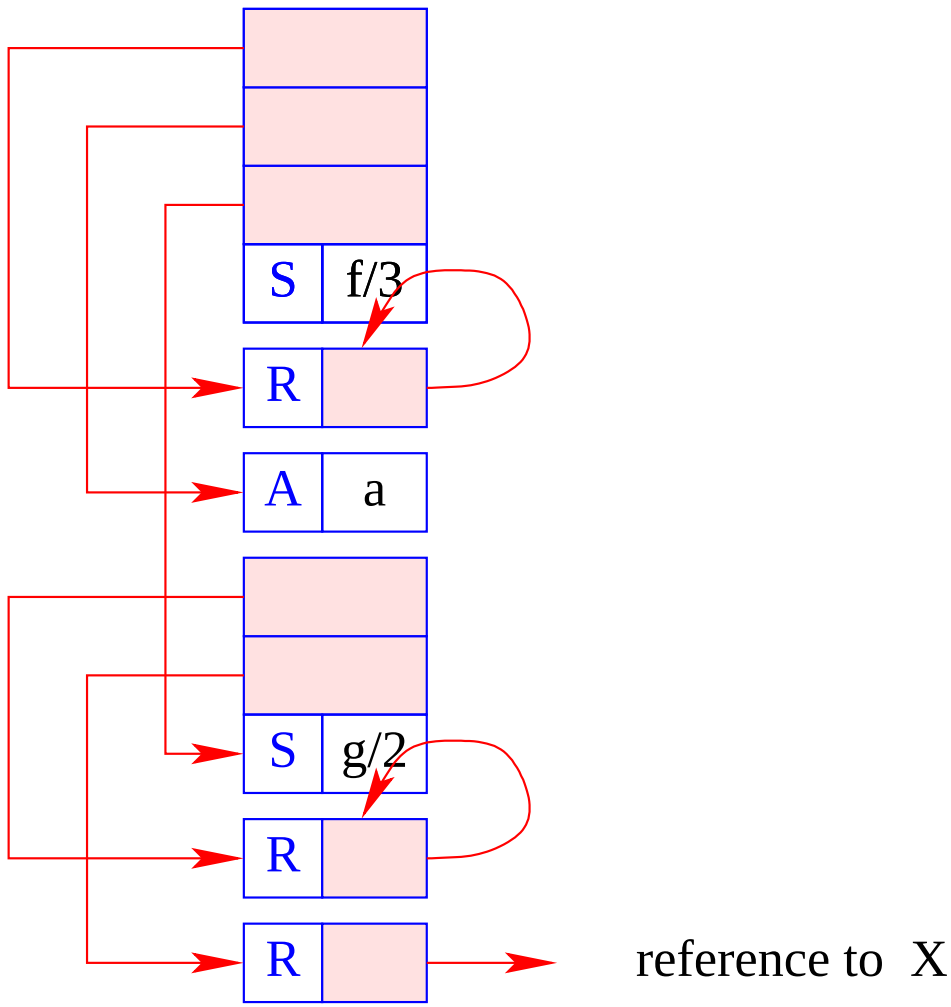

For a distinction, we mark occurrences of already initialized variables through over-lining (e.g. $\bar{X}$).

Note: Arguments are always initialized!

Then we define:

$$
\begin{array}{lcl}
\text{code}_A\, a\, \rho & = & \text{putatom a} \\
\text{code}_A\, X\, \rho & = & \text{putvar}\,(\rho\, X) \\
\text{code}_A\, \bar{X}\, \rho & = & \text{putref}\,(\rho\, X) \\
\text{code}_A\, _\, \rho & = & \text{putanon}
\end{array}
\qquad
\begin{array}{lcl}
\text{code}_A\, f(t_1, \ldots, t_n)\, \rho & = & \text{code}_A\, t_1\, \rho \\
 & & \ldots \\
 & & \text{code}_A\, t_n\, \rho \\
 & & \text{putstruct f/n}
\end{array}
$$

For a distinction, we mark occurrences of already initialized variables through over-lining (e.g. $\bar{X}$).

Note: Arguments are always initialized!

Then we define:

$$
\begin{array}{lcl}
\text{code}_A\, a\, \rho & = & \text{putatom a} \\
\text{code}_A\, X\, \rho & = & \text{putvar}\,(\rho\, X) \\
\text{code}_A\, \bar{X}\, \rho & = & \text{putref}\,(\rho\, X) \\
\text{code}_A\, _\, \rho & = & \text{putanon}
\end{array}
\qquad
\begin{array}{lcl}
\text{code}_A\, f(t_1, \ldots, t_n)\, \rho & = & \text{code}_A\, t_1\, \rho \\
 & & \ldots \\
 & & \text{code}_A\, t_n\, \rho \\
 & & \text{putstruct f/n}
\end{array}
$$

For $f(g(X, Y), a, Z)$ and $\rho = \{X \mapsto 1, Y \mapsto 2, Z \mapsto 3\}$ this results in the sequence:

putref 1	putatom a
putvar 2	putvar 3
putstruct g/2	putstruct f/3

The instruction putatom a constructs an atom in the heap:

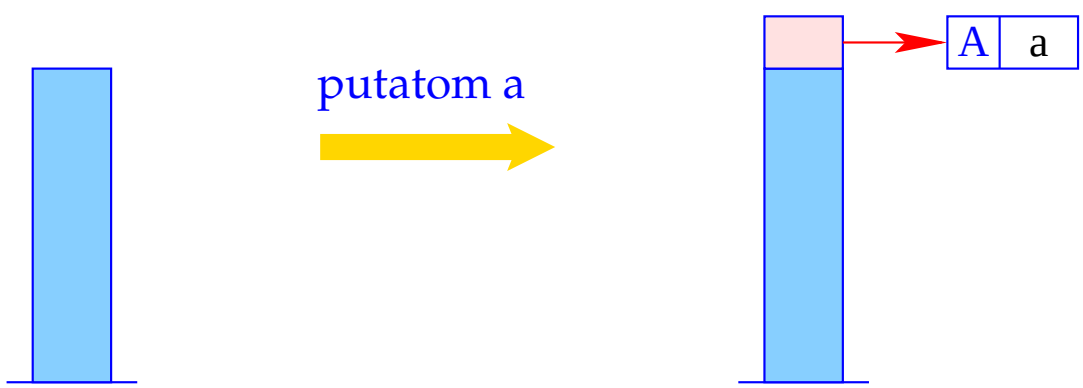

SP++; S[SP] = new (A,a);

The instruction putvar i introduces a new unbound variable and additionally initializes the corresponding cell in the stack frame:

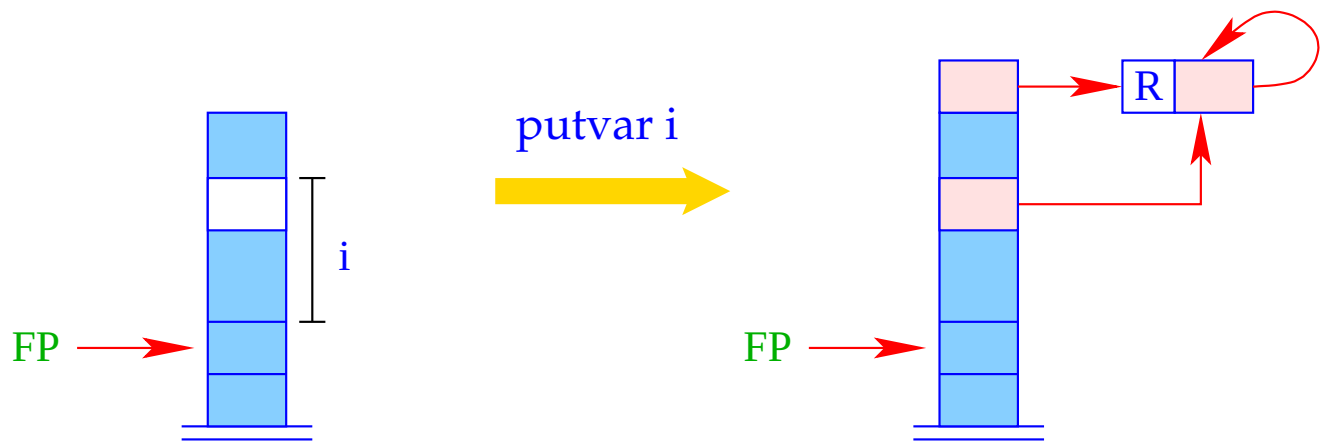

SP = SP + 1;
S[SP] = new (R, HP);
S[FP + i] = S[SP];

The instruction putanon introduces a new unbound variable but does not store a reference to it in the stack frame:

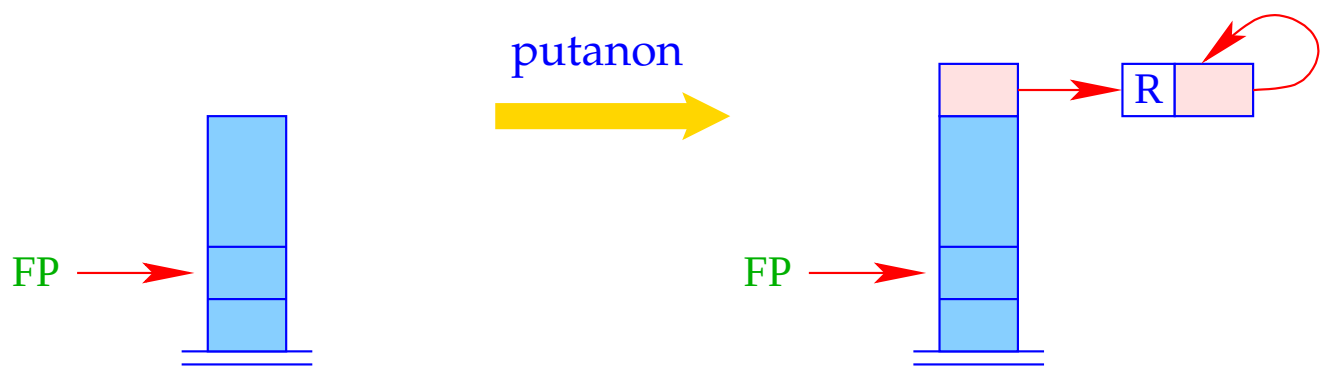

SP = SP + 1;
S[SP] = new (R, HP);

The instruction putref i pushes the value of the variable onto the stack:

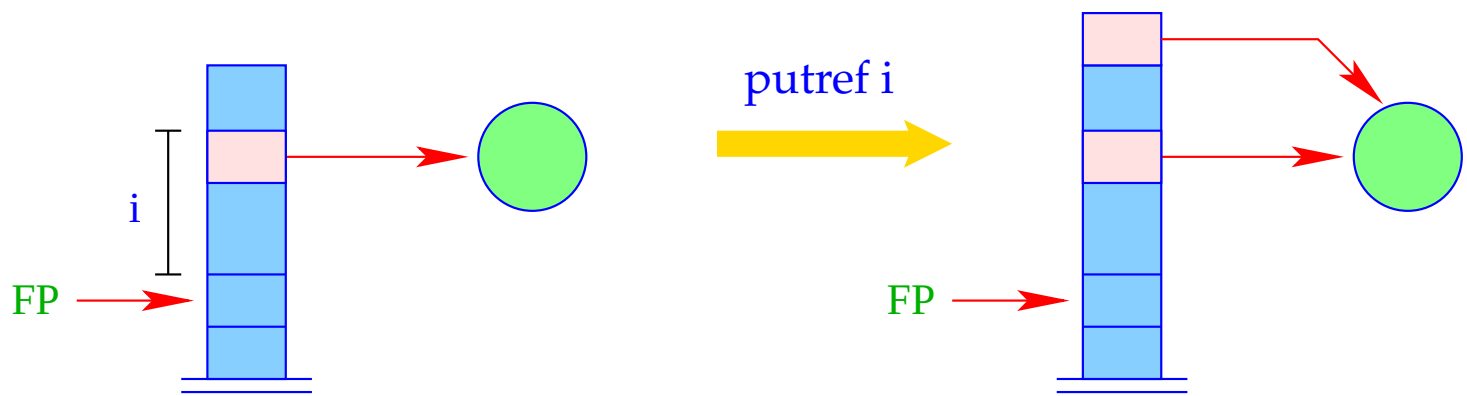

SP = SP + 1;
S[SP] = deref S[FP + i];

The instruction putref i pushes the value of the variable onto the stack:

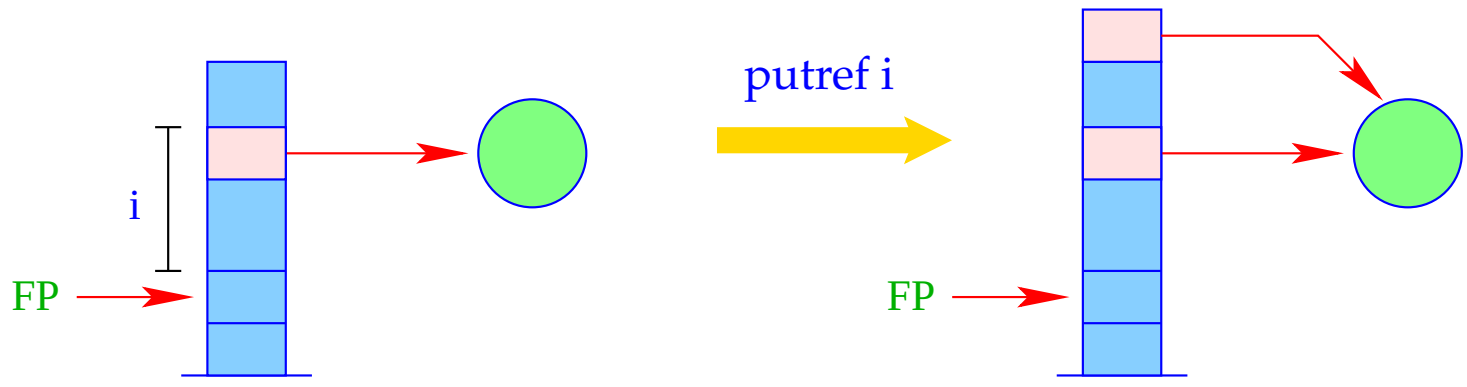

SP = SP + 1;
S[SP] = deref S[FP + i];

The auxiliary function deref contracts chains of references:

```
ref deref (ref v) {
      if (H[v]==(R,w) && v!=w) return deref (w);
      else return v;
}
```

The instruction putstruct i builds a constructor application in the heap:

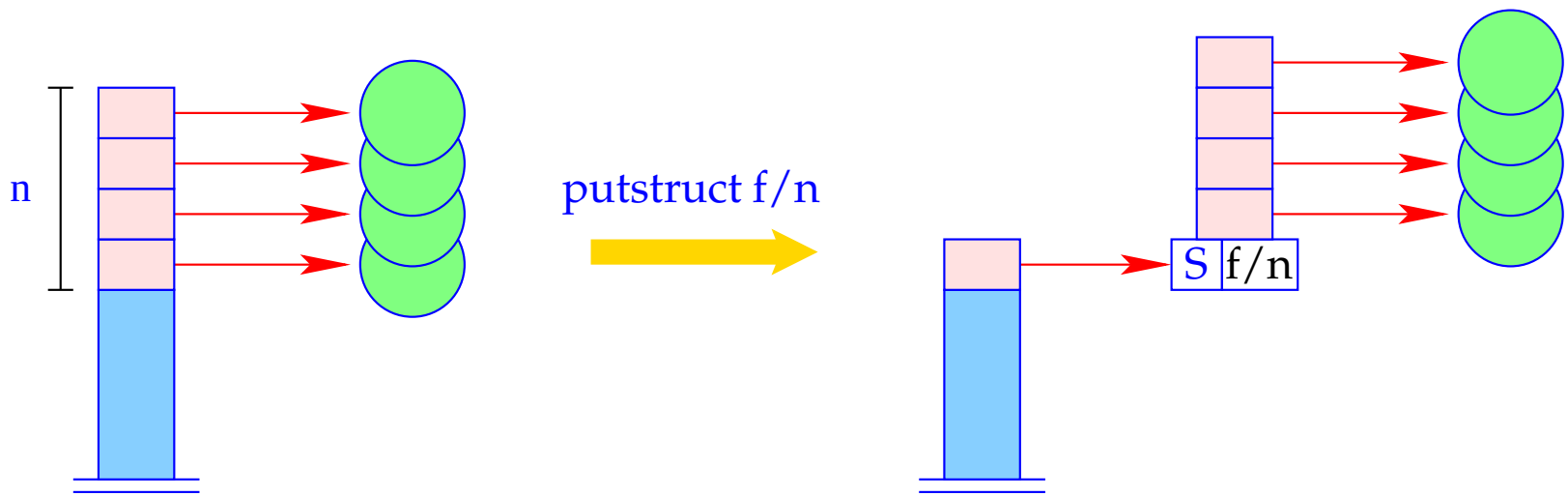


```
v = new (S, f, n);
SP = SP - n + 1;
for (i=1; i<=n; i++)
    H[v + i] = S[SP + i -1];
S[SP] = v;
```

Remarks:

- The instruction putref i does not just push the reference from $S[FP + i]$ onto the stack, but also dereferences it as much as possible

  $\Longrightarrow$ maximal contraction of reference chains.

- In constructed terms, references always point to smaller heap addresses.

  Also otherwise, this will be often the case. Sadly enough, it cannot be guaranteed in general :-(

29 The Translation of Literals (Goals)

Idea:

- Literals are treated as procedure calls.
- We first allocate a stack frame.
- Then we construct the actual parameters (in the heap)
- ... and store references to these into the stack frame.
- Finally, we jump to the code for the procedure/predicate.

$$
\begin{array}{rcll}
\text{code}_G\ p(t_1, \ldots, t_k)\ \rho & = & \text{mark B} & \text{// allocates the stack frame} \\
 & & \text{code}_A\ t_1\ \rho & \\
 & & \ldots & \\
 & & \text{code}_A\ t_k\ \rho & \\
 & & \text{call p/k} & \text{// calls the procedure p/k} \\
 & \text{B :} & \ldots &
\end{array}
$$

$$
\begin{array}{rcll}
\text{code}_G\ p(t_1,\ldots,t_k)\ \rho & = & \text{mark B} & \text{// allocates the stack frame} \\
 & & \text{code}_A\ t_1\ \rho & \\
 & & \ldots & \\
 & & \text{code}_A\ t_k\ \rho & \\
 & & \text{call p/k} & \text{// calls the procedure p/k} \\
 & \text{B :} & \ldots &
\end{array}
$$

Example: $p(a, X, g(\bar{X}, Y))$ with $\rho = \{X \mapsto 1, Y \mapsto 2\}$

We obtain:

```
mark B          putref 1                call p/3
putatom a       putvar 2        B:      ...
putvar 1        putstruct g/2
```

Stack Frame of the WiM:

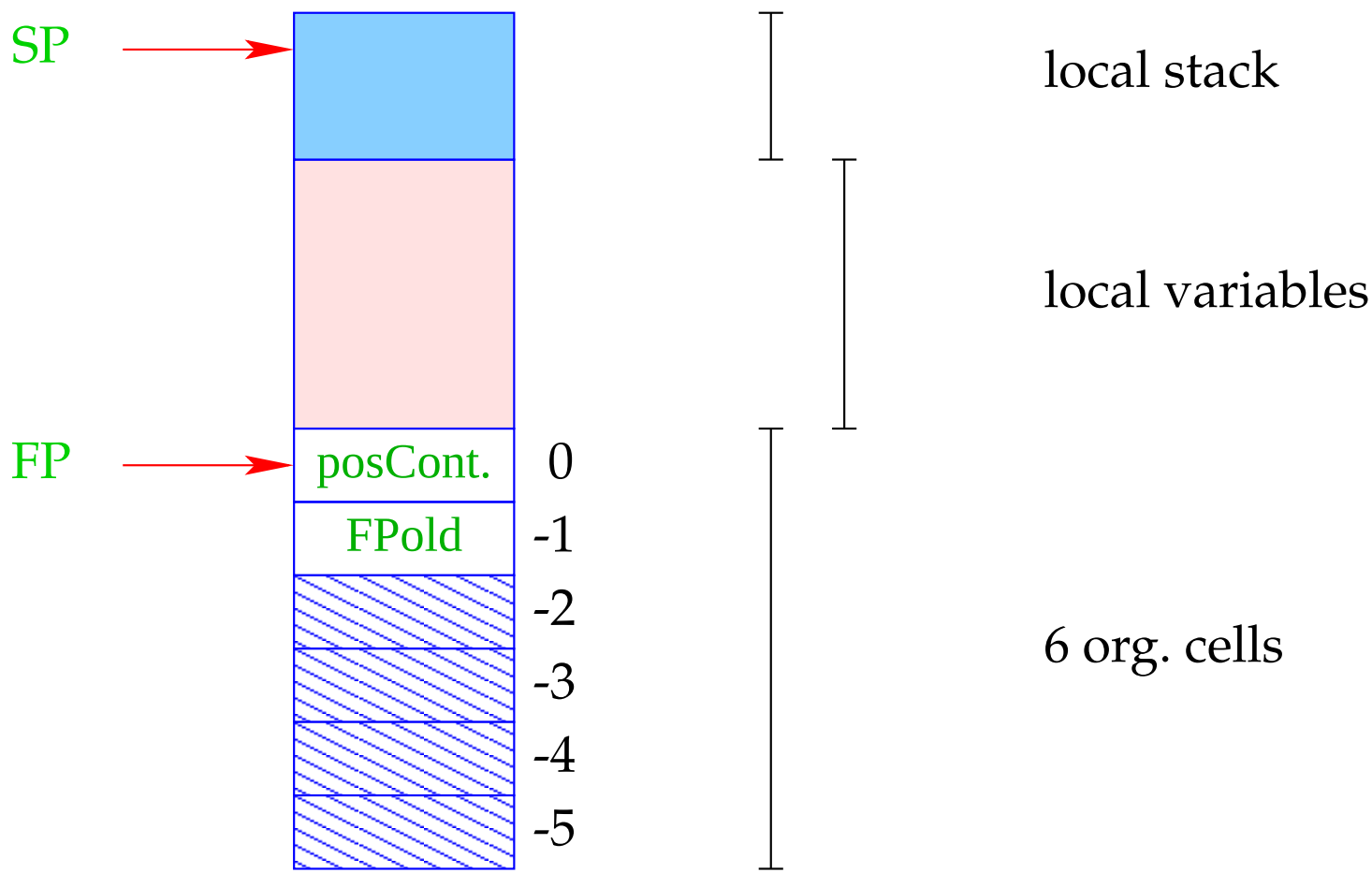

Remarks:

- The positive continuation address records where to continue after successful treatment of the goal.
- Additional organizational cells are needed for the implementation of backtracking

  $\Longrightarrow$ will be discussed at the translation of predicates.

The instruction mark B allocates a new stack frame:

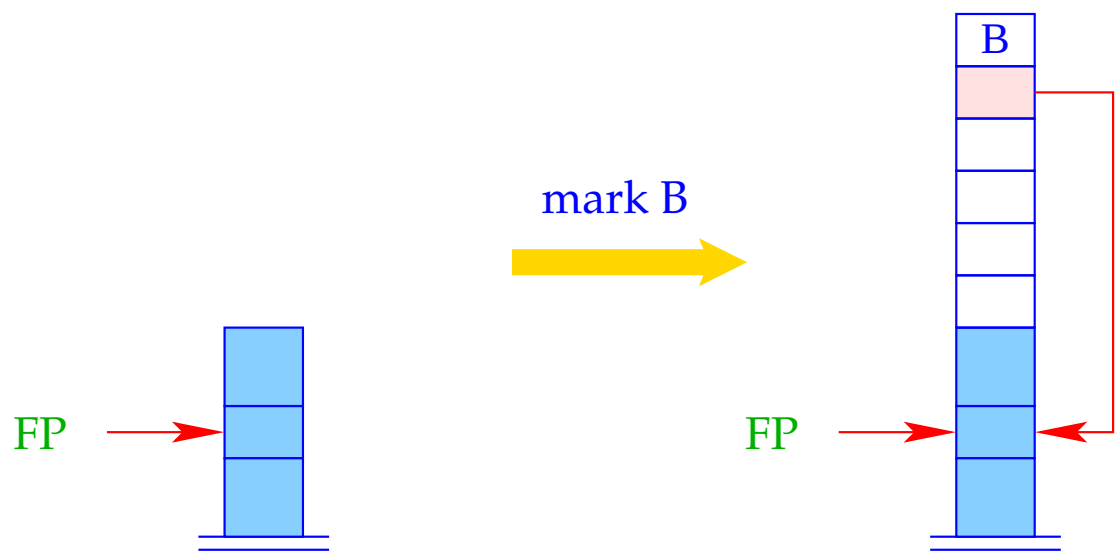

SP = SP + 6;
S[SP] = B; S[SP-1] = FP;

The instruction call p/n calls the n-ary predicate p :

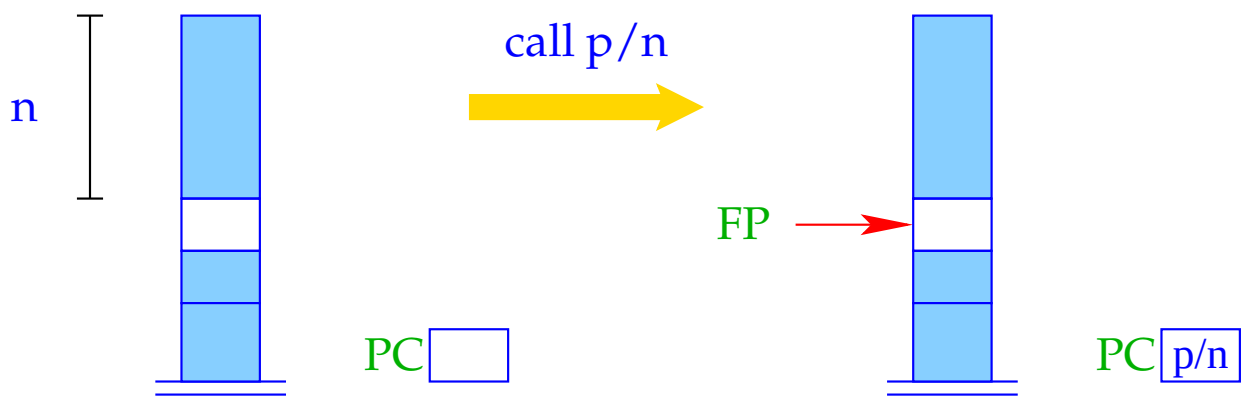

FP = SP - n;
PC = p/n;

30 Unification

Convention:

- By $\tilde{X}$, we denote an occurrence of X;
  it will be translated differently depending on whether the variable is initialized or not.
- We introduce the macro $\text{put}\ \tilde{X}\ \rho$:

$$
\begin{array}{lcl}
\text{put}\ X\ \rho & = & \text{putvar}\ (\rho\, X) \\
\text{put}\ _\ \rho & = & \text{putanon} \\
\text{put}\ \bar{X}\ \rho & = & \text{putref}\ (\rho\, X)
\end{array}
$$

Let us translate the unification $\tilde{X} = t$.

Idea 1:

- Push a reference to (the binding of) X onto the stack;
- Construct the term t in the heap;
- Invent a new instruction implementing the unification :-)

Let us translate the unification $\tilde{X} = t$.

Idea 1:

- Push a reference to (the binding of) X onto the stack;
- Construct the term t in the heap;
- Invent a new instruction implementing the unification :-)

$$
\begin{aligned}
\text{code}_G\ (\tilde{X} = t)\ \rho \quad = \quad & \text{put}\ \tilde{X}\ \rho \\
& \text{code}_A\ t\ \rho \\
& \text{unify}
\end{aligned}
$$

Example:

Consider the equation:

$$\bar{U} = f(g(\bar{X}, Y), a, Z)$$

Then we obtain for an address environment

$$\rho = \{X \mapsto 1, Y \mapsto 2, Z \mapsto 3, U \mapsto 4\}$$

putref 4	putref 1	putatom a	unify
	putvar 2	putvar 3	
	putstruct g/2	putstruct f/3	

The instruction unify calls the run-time function `unify()` for the topmost two references:

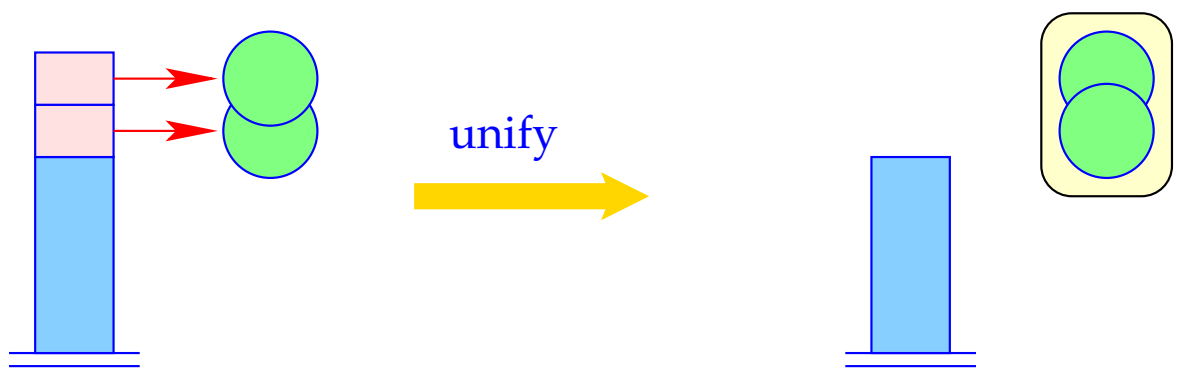

unify (S[SP-1], S[SP]);
SP = SP–2;

The Function `unify()`

- ... takes two heap addresses.

  For each call, we guarantee that these are maximally de-referenced.

- ... checks whether the two addresses are already identical.

  If so, does nothing :-)

- ... binds younger variables (larger addresses) to older variables (smaller addresses);

- ... when binding a variable to a term, checks whether the variable occurs inside the term $\Longrightarrow$ occur-check;

- ... records newly created bindings;

- ... may fail. Then backtracking is initiated.

```
bool unify (ref u, ref v) {
   if (u == v) return true;
   if (H[u] == (R,_)) {
      if (H[v] == (R,_)) {
         if (u>v) {
            H[u] = (R,v); trail (u); return true;
         } else {
            H[v] = (R,u); trail (v); return true;
         }
      } elseif (check (u,v)) {
         H[u] = (R,v); trail (u); return true;
      } else {
         backtrack(); return false;
      }
   }
   ...
```

```
...
 if ((H[v] == (R,_)) {
      if (check (v,u)) {
         H[v] = (R,u); trail (v); return true;
      } else {
         backtrack(); return false;
      }
   }
   if (H[u]==(A,a) && H[v]==(A,a))
      return true;
   if (H[u]==(S, f/n) && H[v]==(S, f/n)) {
      for (int i=1; i<=n; i++)
         if(!unify (deref (H[u+i]), deref (H[v+i])) return false;
      return true;
   }
   backtrack(); return false;
}
```

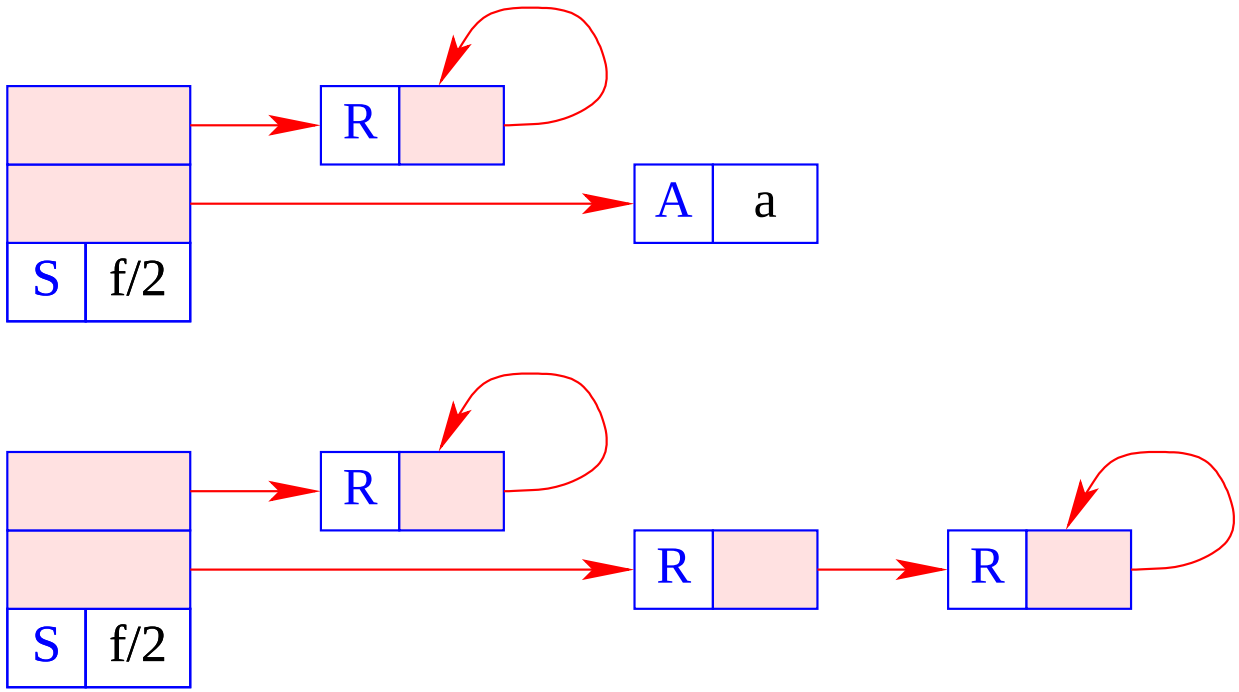
R
A
a
S
f/2
R
R
R
S
f/2

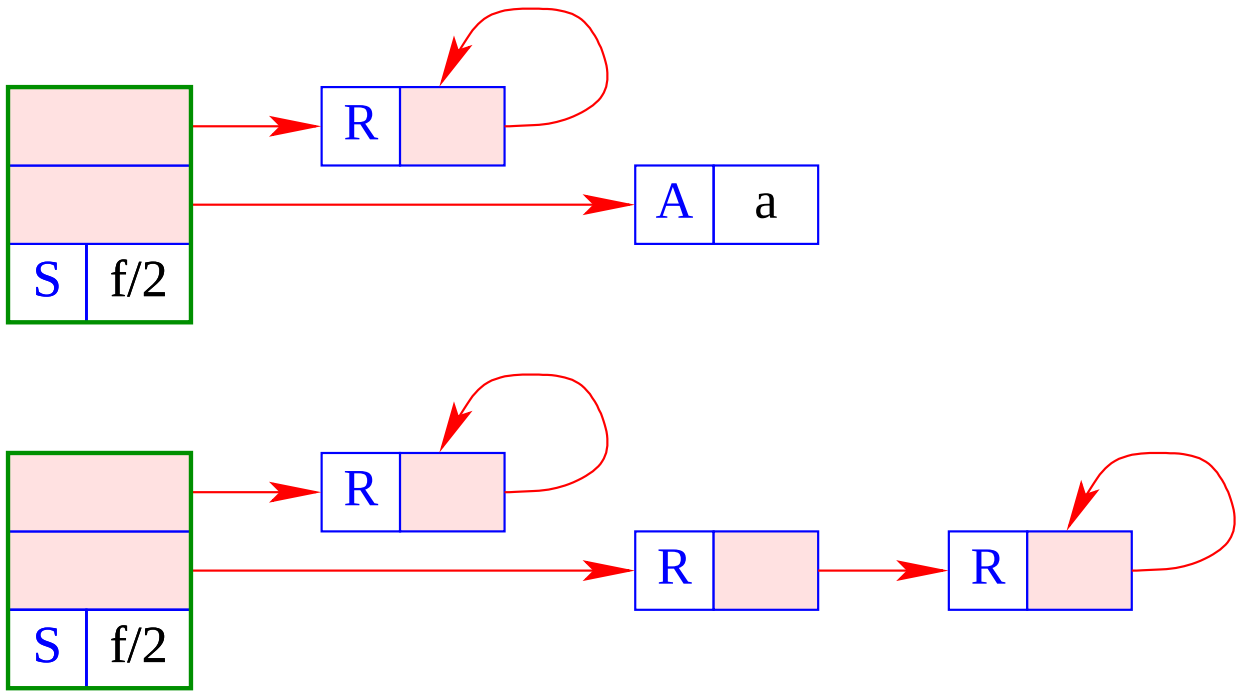
R
A
a
S
f/2
R
R
R
S
f/2

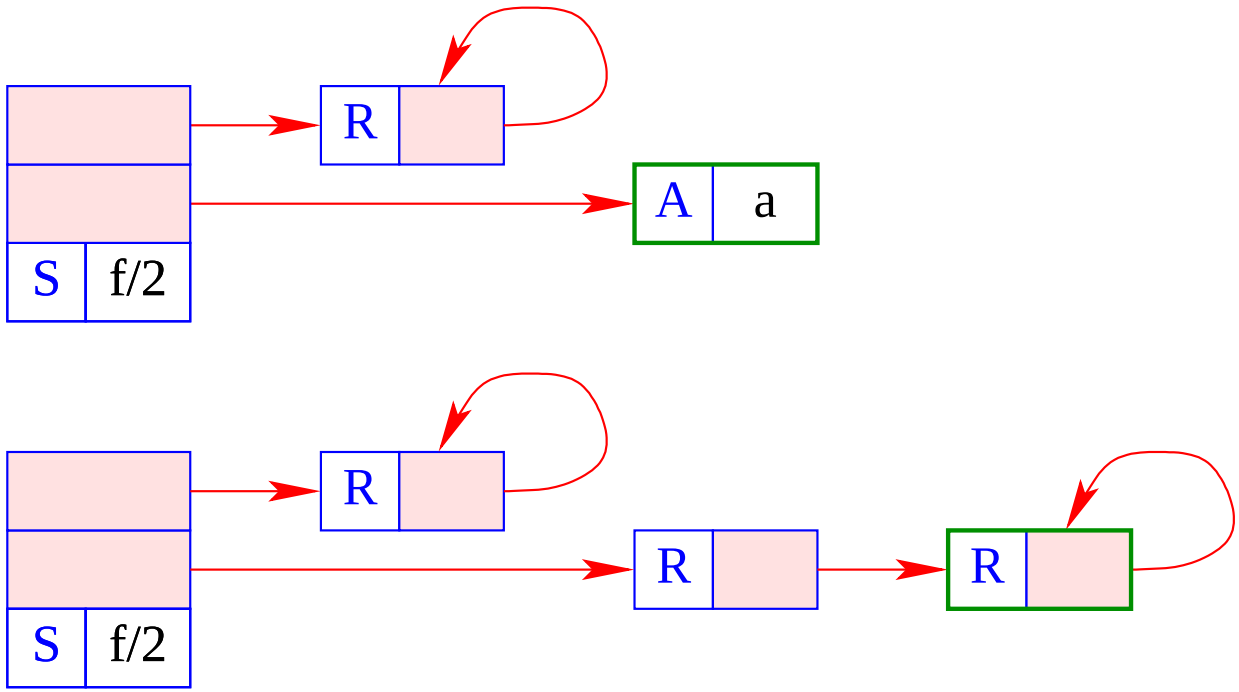
R
A
a
S
f/2
R
R
R
S
f/2

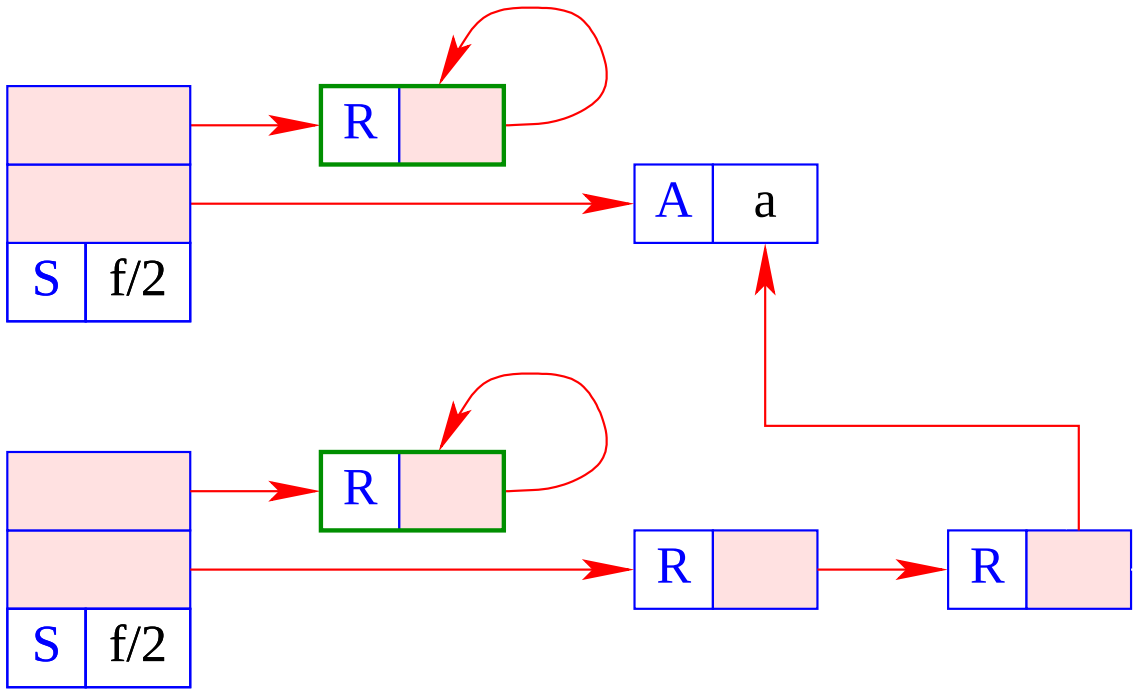
R
A
a
S
f/2
R
R
R
S
f/2

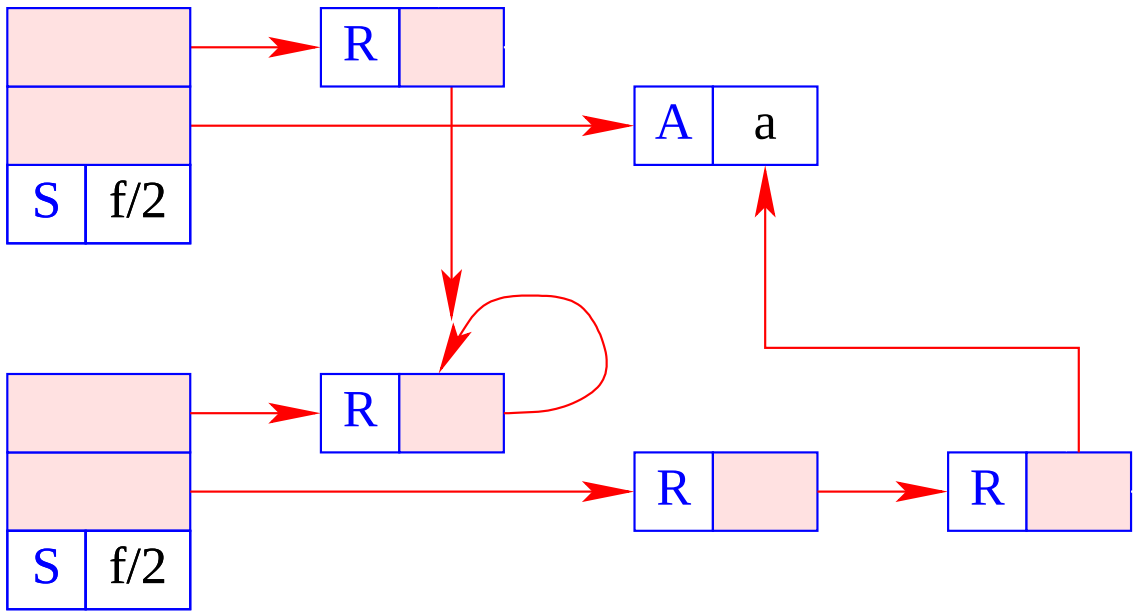
R
A
a
S
f/2
R
R
R
S
f/2

- The run-time function `trail()` records the a potential new binding.
- The run-time function `backtrack()` initiates backtracking.
- The auxiliary function `check()` performs the occur-check: it tests whether a variable (the first argument) occurs inside a term (the second argument).
- Often, this check is skipped, i.e.,

```
bool check (ref u, ref v) { return true;}
```

Otherwise, we could implement the run-time function `check()` as follows:

```
bool check (ref u, ref v) {
   if (u == v) return false;
   if (H[v] == (S, f/n)) {
      for (int i=1; i<=n; i++)
         if (!check(u, deref (H[v+i])))
            return false;
   return true;
}
```